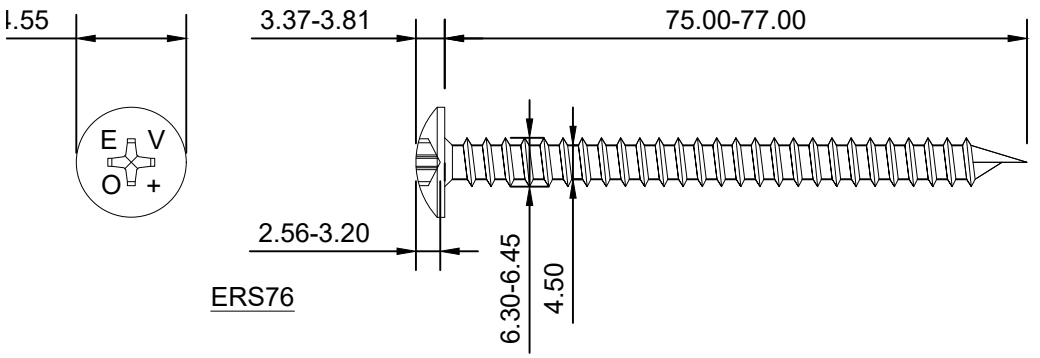

ERS76

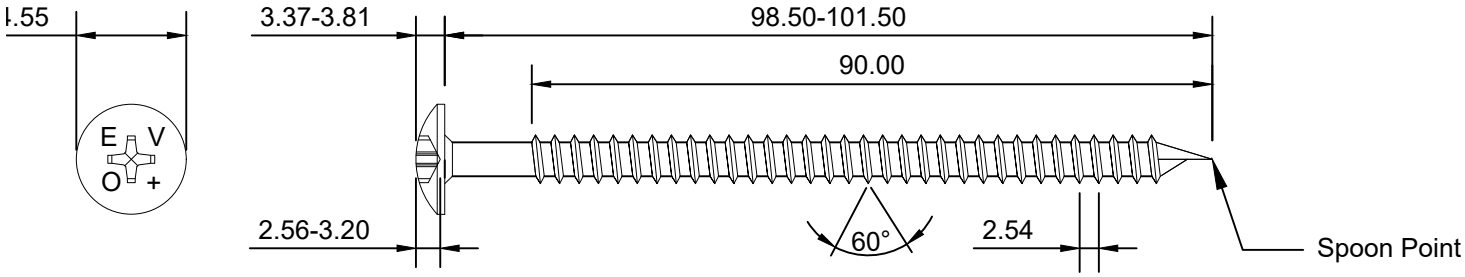

ERS100

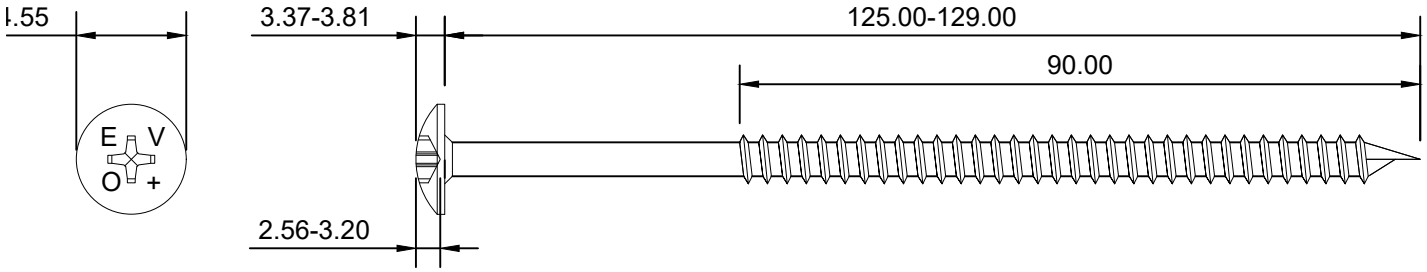

ERS127

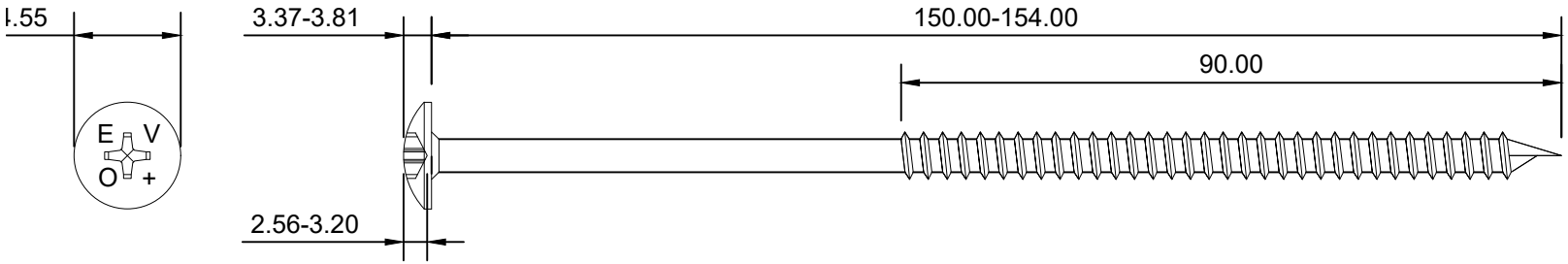

ERS152

PLEASE NOTE:

1. **DO NOT SCALE**
2. All dimensions in millimeters unless otherwise noted. S sections to be designed by others. Evolution fasteners s in accordance with material loads provided by project s Engineer. Evolution fasteners must be installed as per b practice or manufacturers guidelines.
3. Due to the nature of the product, this drawing is provide without prejudice, without recourse, without liability, non-assumpsit, no assured value, errors and omissions excepted, subject to change without notice and all right reserved. This drawing remains the intellectual propert Evolution Fasteners UK Ltd and must not be copied, alt reproduced without the expressed, written approval of E Fasteners UK Ltd. This drawing supersedes all previous versions and is subject to change without notice, as suc dimensions may not match historical stock or product.

Evolution Fasteners UK L

DRAWING NUMBER: EVO-TD-IF-HR-0114	SHEET 01
DESCRIPTION: ERS RANGE	
FASTENER MATERIAL GRADE: Carbon Steel (C1022 grade)	
COATING: EvoShield® 500HR	